## FEATURING:

- RUGGED COMPOSITE CABIN CONSTRUCTION
- 4-SEASON RATED FULLY INSULATED CABIN
- HEATED 30 GALLON WATER TANK
- LITHIUM BATTERY STORAGE & 400W SOLAR SYSTEM
- 12V AIR CONDITIONER (operates without shore power)
- INDEPENDENT SUSPENSION BY CRUISEMASTER®
- EXTERIOR SLIDE-OUT KITCHEN
- DUAL ZONE REFRGERATOR/FREEZER
- OPTIONAL 360˚ AWNING
- REAR RECOVERY POINTS
- RUGGED POWDER COATED STEEL PERIMITER FRAME
- INTEGRATED T-TRACK SYSTEM FOR ACCESSORY MOUNTING

| SPECIFICATIONS: | OB120 |
|---|---|
| **DIMENSIONS** | |
| Overall Length | 16 ft 9 in |
| Overall Width *(including fenders)* | 79.5 in |
| Overall Height | 7 ft 0 in |
| Interior Height *(floor-to-ceiling)* | 47.5 in |
| Interior Width *(wall-to-wall)* | 54 in |
| Ground Clearance *(to skid plate)* | 16.5 in |
| Ground Clearance *(to frame)* | 21 in |
| Tire Size | 245/75 R16 |
| **WEIGHTS** | |
| Unit Weight | 2,460 lbs |
| Max Trailer Capacity *(GVWR)* | 4,200 lbs |
| Tongue Weight | 280 lbs |
| Cargo Capacity | 1,740 lbs |
| **CAPACITY** | |
| Sleeping Capacity | 2+ |
| Fresh Tank Capacity | 30 Gal |
| Grey Tank Capacity | N/A |
| Refrigerator Capacity | 2.65 cu ft (75 L) |
| LP Tank Capacity | (1x) 20 lb |
| Battery Capacity | 204 Ah Lithium (102Ah x 2) |
| **INFO** | |
| Solar Output | 400 W ** |
| Furnace | 14,300 BTU |
| Air Conditioner *(12V) [optional]* | 7,500 BTU |
| Frame Material | Steel |
| Frame Coating | Powder Coat w/e-coat Primer |

** IF EQUIPPED

www.imperial-outdoors.com

ELECTRICAL • PLUMBING • HEATING • FIRE SAFETY
MANUFACTURER CERTIFIES COMPLIANCE WITH STANDARD FOR RECREATIONAL VEHICLES NFPA 1192
G 0000000
MEMBER RECREATION VEHICLE INDUSTRY ASSOCIATION
RVIA
MOTORHOME

IMPERIAL OUTDOORS®

a brand by Nelson Industries, Inc.
Proudly built in Saint Croix Falls, WI.
**email: info@imperial-outdoors.com**

# INTRODUCING THE ALL-NEW OUTBACK SERIES

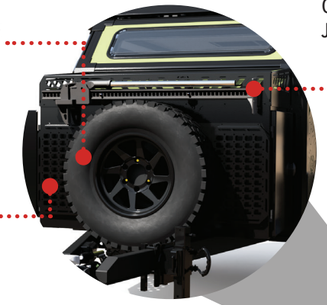

FRONT-MOUNTED FULL SIZE SPARE TIRE AND WHEEL

OPTIONAL HI-LIFT JACK MOUNT

AUXILIARY GRID PANELS FOR MOUNTING TOOLS OR ACCESSORIES

THERMAL ACRYLIC WINDOW

DUAL EASY ACCESS ENTRY DOORS

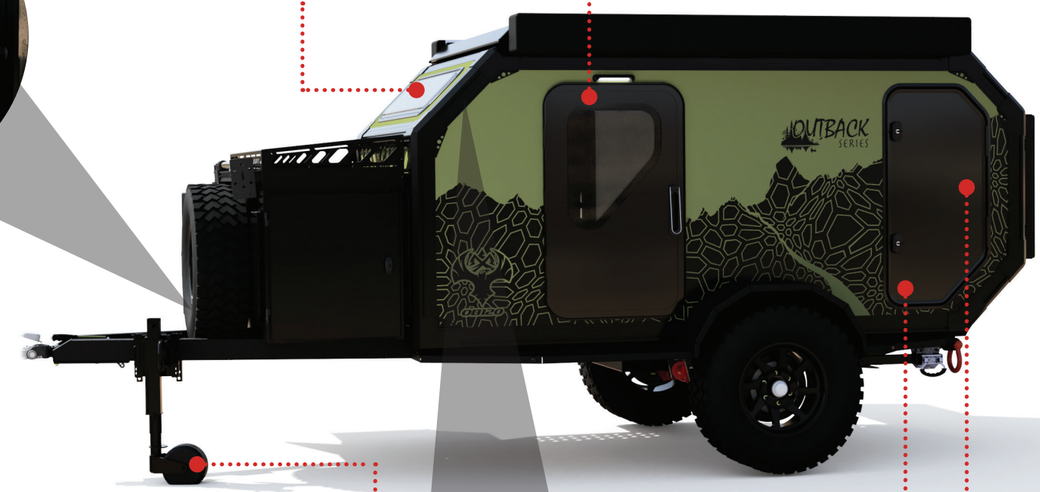


OPTIONAL 12V AIR CONDITIONER (operates without shore power)

OPTIONAL 180˚ AWNINGS (X2) CREATES A 360˚ SHELTER FROM THE ELEMENTS

400W ROOFTOP SOLAR (2x 200W PANELS)

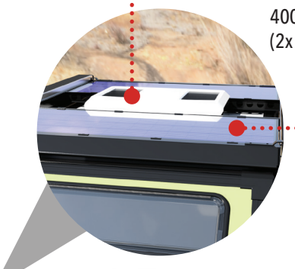

LIGHTWEIGHT, FULLY INSULATED COMPOSITE CONSTRUCTION

REINFORCED A-FRAME TONGUE WITH ARK® JACK

20A SHORE POWER PLUG
FRESH TANK FILL
AUXILLARY WATER SUPPLY

FRONT UTILITY BOX W/LP & ADDITIONAL STORAGE

LARGE UTILITY CLOSET FOR EASY ACCESS TO FURNACE, WATER, AND POWER SUPPLIES

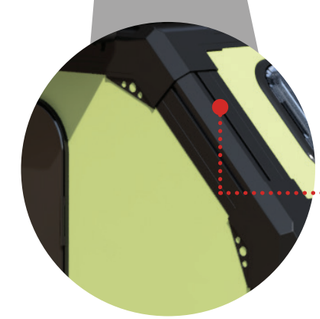

INTEGRATED T-TRACK FOR ATTACHING YOUR FAVORITE ACCESSORIES

CRUISEMASTER® ARTICULATING HITCH

SLIDE-OUT KITCHEN WITH PANTRY CLOSET

OPTIONAL ARK® STABILIZER JACKS

75L DUAL ZONE REFRIGERATOR / FREEZER W/EXPANDABLE COUNTER / CUTTING BOARD

30 GAL FRESH TANK

CRUISEMASTER® CRS INDEPENDENT SUSPENSION W/ ALL TERRAIN TIRES

POWDER COATED STEEL FRAME

FLOOR PLAN

| | |
|---|---|
| OVERALL LENGTH: 15' 8" (Hitch to Back Wall) | SLEEPING CAPACITY: 2+ |
| DESCRIPTION: OB120 MODEL HIGHLIGHTS | CABIN DIMENSIONS: 10' 0" L X 6'0" W |
| SERIES: OUTBACK SERIES | REVISION #: REV. 05-2025 |
| | MODEL#: OB120 |

IMPERIAL OUTDOORS®

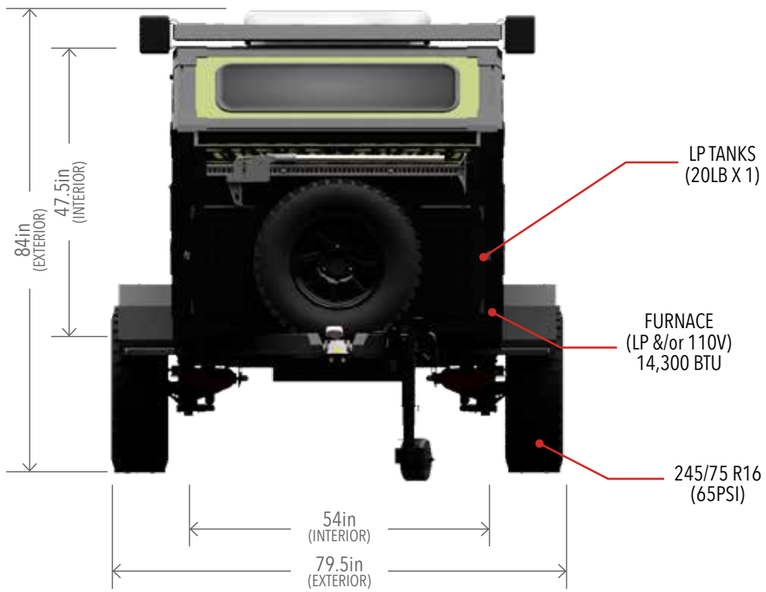

4,200 lbs (GVWR) [MAXIMUM RATED WEIGHT WHEN LOADED WITH GEAR & WATER]
- 2,543 lbs (UNIT WT) [DRY WEIGHT OF UNIT - EMPTY OF ALL GEAR & WATER]
1,657 lbs (CARGO CAP) [MAXIMUM WEIGHT OF ALLOWED CARGO - INCLUDING FULL WATER TANK @ 250lbs]

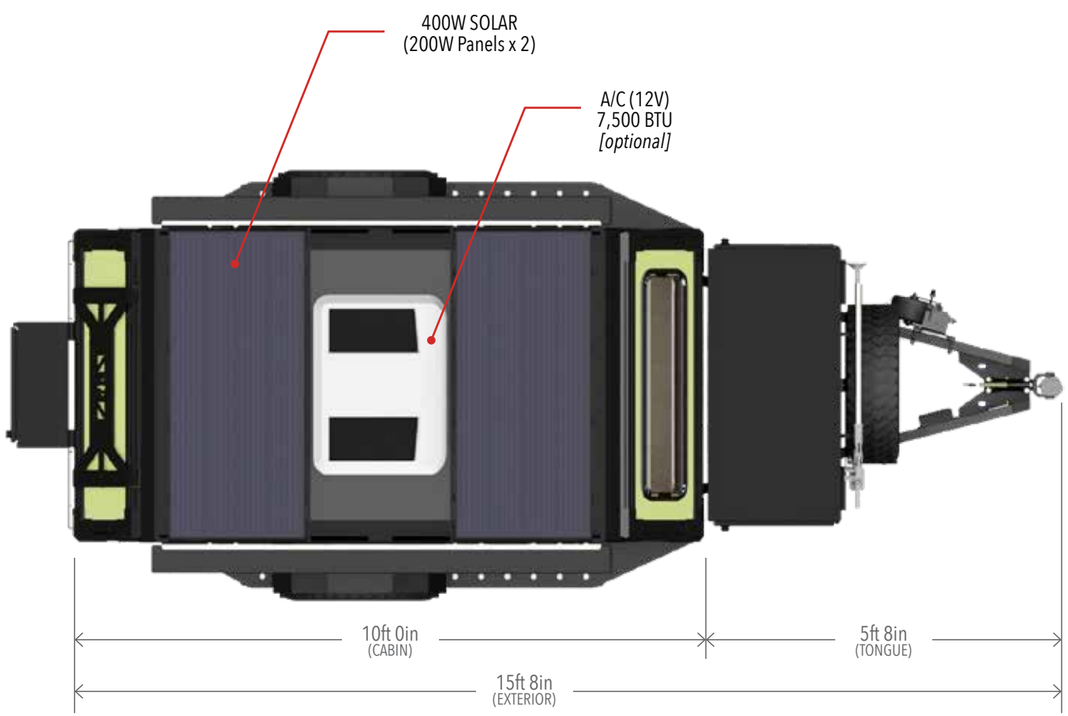


** ESTIMATED SPECIFICATION

| SPECIFICATIONS: | OB120 |
|---|---|
| **DIMENSIONS** | |
| Overall Length | 16 ft 9 in |
| Overall Width *(including fenders)* | 79.5 in |
| Overall Height | 7 ft 0 in |
| Interior Height *(floor-to-ceiling)* | 47.5 in |
| Interior Width *(wall-to-wall)* | 54 in |
| Ground Clearance *(to skid plate)* | 16.5 in |
| Ground Clearance *(to frame)* | 21 in |
| Tire Size | 245/75 R16 |
| **WEIGHTS** | |
| Unit Weight | 2,543 lbs** |
| Max Trailer Capacity *(GVWR)* | 4,200 lbs** |
| Tongue Weight | 280 lbs** |
| Cargo Capacity | 1,657 lbs** |
| **CAPACITY** | |
| Sleeping Capacity | 2+ |
| Fresh Tank Capacity | 30 Gal |
| Grey Tank Capacity | N/A |
| Refrigerator Capacity | 2.65 cu ft (75 L) |
| LP Tank Capacity | (1x) 20 lb |
| Battery Capacity | 204 Ah Lithium (102Ah x 2) |
| **INFO** | |
| Solar Output | 400 W |
| Furnace | 14,300 BTU |
| Air Conditioner *(12V) [optional]* | 7,500 BTU |
| Frame Material | Steel |
| Frame Coating | Powder Coat w/e-coat Primer |

OVERALL LENGTH:
15' 8" (Hitch to Back Wall)

SLEEPING CAPACITY:
2+

DESCRIPTION:
OB120 MODEL HIGHLIGHTS

CABIN DIMENSIONS:
10' 0" L X 6'0" W

REVISION #:
REV. 03-2025

SERIES:
OUTBACK SERIES

MODEL#:
OB120

IMPERIAL OUTDOORS®